High-Efficiency Class-E Power Amplifiers for mmWave Radar Sensors: Design and Implementation

Tolga Dinc, *Member, IEEE*, Sachin Kalia, *Member, IEEE*, Siraj Akhtar, Baher Haroun, *Fellow, IEEE*, Benjamin Cook, and Swaminathan Sankaran, *Member, IEEE*

***Abstract*— This article presents high-efficiency power amplifiers (PAs) implemented in Texas Instruments' (TI) 130-nm BiCMOS process for *V*- and *E*-band millimeter-wave (mmWave) radar sensors. A new Class-E output network based on a doubly tuned (DT) transformer is proposed to enable high-efficiency mmWave operation. The proposed Class-E network allows increasing PA device size beyond the traditional Class-E design limits while preserving nonoverlapping Class-E current and voltage waveforms. Design examples for single-ended and differential implementation of the proposed Class-E network are presented in this article. Three PA prototypes (a 79-GHz two-stage PA, a 63-GHz single-stage PA, and a 79-GHz single-stage PA) have been designed and fabricated in a high-volume production 130-nm BiCMOS process. A Class-E interstage network with a split-and-combine 45° transformer is employed in the two-stage PA to ease driving the last stage PA devices. Device layout optimization for improved efficiency is described in this article. The measurement results achieve a peak power-added efficiency (PAE) of 30.5%/34.7%/32.6% with an output power of 17/18.1/17 dBm for the 79-GHz two-stage, 63-GHz single-stage, and 79-GHz single-stage PAs, respectively. To the best of our knowledge, these are the record PAE numbers reported for *V*- and *E*-band PAs in any silicon process, demonstrating the efficacy of the proposed DT transformer-based Class-E output network.**

***Index Terms*— Automotive radar, Bipolar CMOS (BiCMOS), Class-E, Class-E inverter, millimeter-wave (mmWave) circuits, mmWave radar, monostatic frequency-modulated continuous-wave (FMCW) radar, phased arrays, power amplifiers (PAs).**

I. Introduction

MILLIMETER-WAVE (mmWave) radar sensors operating in the 76–81-GHz band are key components of advanced driver assistance systems. As car manufacturers race toward supporting high levels of autonomy, there is an increased demand for silicon radar solutions, which can support multiple complex scenarios with various performance requirements (mainly with improved range, velocity, and angular resolution). There are also a wide range of other use cases for mmWave radars in 60- and 77-GHz bands, ranging from providing machine vision in industrial settings and vital signal monitoring to providing vision for smart home tools and appliances. In recent years, easy to deploy and compact form-factor silicon-based mmWave sensors [1]–[7] have proven to be optimum solution for supporting all these emerging use cases.

	System Specs
Pout (dBm)	12.5
NF (dB)	15
Antenna Gain (dBi)	12
T_{frame} (ms)	10
RCS (sq.m)	5
S_0/N_0 (dB)	18
Range (m)	~140

Fig. 1. Typical system performance of a medium range silicon-based automotive radar sensors.

Fig. 1 summarizes the typical system specifications for silicon-based mmWave radar sensors, which is the most demanding among all use cases [2], [8]. To support a medium range of around 140 m (assuming RX noise figure (NF) of 15 dB, 12-dBi antenna gain, 18-dB SNR, and radar cross section of 5 m^2), a transmitter output power of 12.5 dBm at 125 °C per channel is required at each antenna input, after incurring transition and package losses [2]. Assuming a 3–4-dB margin for package loss, temperature, and robust operation across process, high-efficiency power amplifiers (PAs), which can deliver 16–17 dBm on the silicon at room temperature in the 76–81-GHz band, are needed to support automotive use cases.

Design of mmWave high-efficiency PAs with medium-to-high output powers of >16 dBm is a major challenge in silicon-based technologies. Lower device breakdown voltage, poor quality of on-chip passives, and lower power gain all limit output power and efficiency. Class-E mmWave switching PAs have been recently explored for high-efficiency, high-power operation in both CMOS [9], [10] and Bipolar CMOS (BiCMOS) [11], [12] technologies and offer very attractive solutions, especially for mmWave radar sensors that employ constant envelope modulations (such as frequency-modulated continuous-wave (FMCW) [1], [13] or phase-modulated continuous-wave (PMCW) [4]). However, scaling up Class-E PAs into mmWave frequency regime (maintaining nonoverlapping drain/collector current and voltage waveforms)

Manuscript received September 22, 2021; revised December 4, 2021 and January 14, 2022; accepted January 17, 2022. Date of publication February 16, 2022; date of current version April 25, 2022. This article was approved by Associate Editor Domine Leenaerts. *(Corresponding author: Tolga Dinc.)*

Tolga Dinc, Sachin Kalia, Siraj Akhtar, Baher Haroun, and Swaminathan Sankaran are with Texas Instruments Inc., Dallas, TX 75243 USA (e-mail: t-dinc@ti.com).

Benjamin Cook was with Texas Instruments Inc., Santa Clara, CA 95051 USA. He is now with Meta, Redmond, Seattle, WA 98052 USA.

Color versions of one or more figures in this article are available at https://doi.org/10.1109/JSSC.2022.3147723.

Digital Object Identifier 10.1109/JSSC.2022.3147723

0018-9200 © 2022 IEEE. Personal use is permitted, but republication/redistribution requires IEEE permission.
See https://www.ieee.org/publications/rights/index.html for more information.

Authorized licensed use limited to: University of Michigan Library. Downloaded on August 25,2022 at 13:45:34 UTC from IEEE Xplore. Restrictions apply.

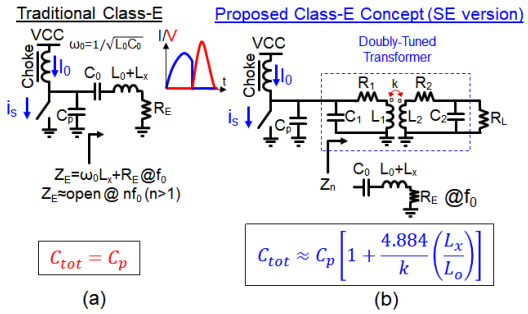

Fig. 2. (a) Traditional Class-E PA with a simple output network consisting of a shunt capacitor C_p, series LC resonator, and optimum Class-E resistance. (b) Proposed DT transformer-based Class-E PA which replaces the series RLC network in Class-E design with a multiresonant higher order network (yet simple, practical, and low loss at mmWave).

is hindered by intrinsic device capacitances and layout parasitics. Specifically, the traditional Class-E design principles place a bound on the output shunt capacitance and thus limit the allowable switching device size at mmWave frequencies, eventually resulting in a high switch-ON resistance, R_{ON}, and reduced PA efficiency. Therefore, there were recent research efforts exploring loss-aware Class-E design methodologies [10]–[12]. These works in essence focus on understanding the design tradeoffs and fundamental limits of traditional Class-E output network [14] at mmWave frequencies in the context of stacked PAs for achieving high output power.

Alternatively, in [15], we introduced high-efficiency Class-E mmWave radar-band PAs enabled by a doubly tuned (DT) transformer-based output network, which breaks the bound imposed by the traditional Class-E design principles on the switching PA device sizes. This results in a new Class-E topology that is fundamentally better suited for mmWave operation and features following advantages: 1) it can tolerate >100% higher device capacitance (scaling down R_{ON} by >2×); 2) it absorbs differential-to-single-ended (SE) conversion; 3) it inherently provides electrostatic discharge (ESD) protection at the output port; and 4) it paves the way for merging mmWave Class-E design with high-efficiency transformer power combining techniques (e.g., merging Class-E design with distributed active transformer combiners [16]).

This article presents a detailed discussion of the high-efficiency Class-E amplifiers reported in [15], including a more detailed description of the DT transformer-based Class-E network, associated tradeoffs, extended simulations, and measurements. This article is organized as follows. Section II briefly reviews recent advances in mmWave Class-E PAs and describes the proposed DT transformer-based Class-E PA concept and its associated design tradeoffs. Implementation details of 60- and 77-GHz radar-band PAs in Texas Instruments' (TI) 130-nm BiCMOS are described in Section III. In Section IV, we present the measurements of the PA prototypes. Section V concludes this article.

II. DT Transformer Class-E Network

A. Class-E Design Challange at mmWave

Switching PAs promise higher efficiencies by reducing voltage and current waveform overlap at the device output,

	f_0	$2f_0$	$3f_0$	$4f_0$	$5f_0$
Class-E	C_p L_x R_E	C_p	C_p	C_p	C_p
Class-E_{23}	C_p L_x R_E	C_p	C_p	short	short
Class-E_2	C_p L_x R_E	C_p	short	short	short
Class-F	Z_{opt}	short	open	short	open
Class-F_{-1}	Z_{opt}	open	short	open	short
Class-$E/F_{2,odd}$	C_p L_x R_E	open	short	short	short

Fig. 3. Frequency-domain view of the Class-E output network.

leading to lower dc power dissipation in the device and thus increased efficiency. As a recap, traditional Class-E switching PA topology is shown in Fig. 2(a). A traditional Class-E network consists of a shunt capacitance $C_p = P_{\text{out}}/(\pi\omega_0 V_{\text{CC}}^2)$ and a series 2nd order LC resonator and Class-E load resistor $R_E = 0.5768(V_{\text{CC}}^2/P_{\text{out}})$. Series LC resonator provides an excess reactance ($\omega_0 L_x = 1.1152 R_E$) at operating frequency (f_0) for phase alignment of nonoverlapping V/I waveforms while blocking all the harmonics. Compared to other switching PAs, Class-E PA topology can better tolerate device output parasitics as it specifically requires a shunt capacitor, making it one of the most popular switching PA topologies at RF frequencies. However, scaling up Class-E PAs into mmWave frequency regime is not straightforward as C_p is inversely proportional with frequency. At mmWave frequencies, all of C_p has to come from device capacitance for high-efficiency operation, and therefore, the limit on C_p is essentially a limit on device size or minimum achievable switch ON-resistance. For example, tolerable output device parasitic is limited at 0.85 and 0.65 fF/mW at 60 and 77 GHz, respectively. This limits device ON-resistance R_{ON} to ~3.6 and ~4.8 Ω for a 17-dBm PA at 60 and 77 GHz, respectively, in a process with $R_{\text{ON}}C_{\text{OFF}}$ of 150 fs (a typical value for advanced processes), therefore making finite ON-resistance the most dominant source of efficiency degradation (approximately 30%–40% in this specific example) at mmWave frequencies. To address this problem, this article proposes a DT transformer-based Class-E output network as shown in Fig. 2(b), which allows scaling switching device size beyond traditional Class-E limit while preserving nonoverlapping Class-E waveforms.

B. DT Transformer-Based Class-E PA

Fig. 3 summarizes the frequency-domain view of Class-E operation, which eases the understanding of the proposed new output network. An ideal Class-E network should provide optimum Class-E parameters (C_p, L_x, and R_E) at the fundamental operation frequency, whereas it converges to just a shunt capacitance at all other harmonics (at $2\omega_0$, $3\omega_0$, $4\omega_0$, and so on) as the excess reactance path presents a high impedance. In addition, at mmWave frequencies, there is a diminishing return by tuning impedance at beyond $3\omega_0$ because of increased passive losses, and thus, supporting

Authorized licensed use limited to: University of Michigan Library. Downloaded on August 25,2022 at 13:45:34 UTC from IEEE Xplore. Restrictions apply.

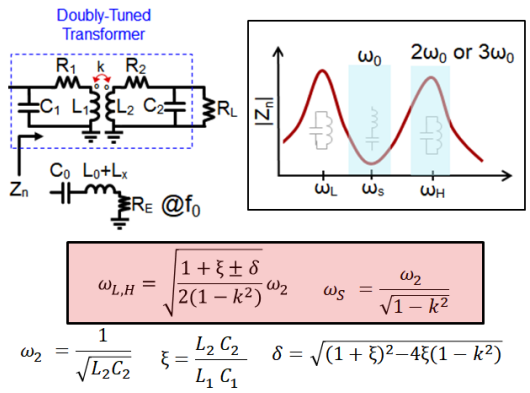

Fig. 4. DT transformer output network, featuring fourth-order frequency response which provides enough degree of freedom for Class-E impedance engineering [17].

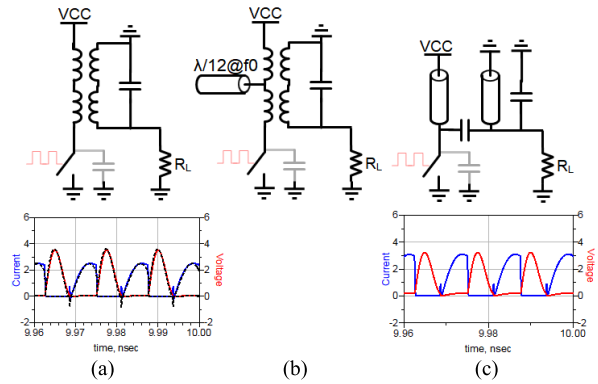

Fig. 5. Coupled resonator-based SE Class-E PA topologies: (a) SE DT transformer-based Class-E_2, (b) SE DT transformer-based Class-$E_{2,3}$, and (c) SE Class-E_2 with transmission-line resonators and capacitive coupling.

harmonics only up to $3\omega_0$ is sufficient to achieve high efficiency, which is depicted as Class-$E_{2,3}$ in Fig. 3. In the ideal case, targeting up to third harmonic would still allow >90–95% efficiency based on our simulations. Another useful implementation case, especially for SE implementation as will be presented later, is Class-E_2 in which Class-E impedances are set at up to second harmonic. Fig. 3 also summarizes the similarities and differences among Class-F, Class-F inverse, Class-E/F designs, and the proposed Class-$E_{2,3}$ design.

This work essentially proposes replacing the series RLC network in traditional Class-E design with a multi-resonant higher order network (yet simple, practical, and low loss at mmWave), which would specifically require additional shunt capacitance on the device side (coming in parallel with C_p). Fig. 2(b) shows the proposed concept of DT transformer-based Class-E PA (SE operation is depicted for simplicity). In this proposed network, total tolerable output capacitance C_{tot} increases from traditional Class-E capacitance, C_p, to $C_p + C_1$, which can be more than $2 \times C_p$ based on our analysis [final relation for C_{tot}[1] given in Fig. 2(b)] and simulations. As shown in Fig. 4, a DT transformer network consists of a transformer shunted with C_1 and C_2 capacitances at both the primary and secondary capacitances. In practical implementation, C_1 and C_2 absorb the shunt parasitic capacitances of the primary and secondary inductors as well. R_1 and R_2 model the finite Q of the transformer coils. A DT has two parallel resonances (ω_L and ω_H) and a series resonance in between, featuring a fourth-order frequency response [17]. It provides enough degree of freedom (L_1, C_1, L_2, C_2, and k) for Class-E impedance engineering at fundamental and another harmonic of choice, just in a single transformer footprint. The proposed PA exploits the vicinity of the series resonance to synthesize the required Class-E impedance at fundamental frequency, and a DT transformer network behaves like a second-order series RLC network in the neighborhood of f_0 [17]. The design parameters L_1, C_1, L_2, C_2, and k can be estimated by using the series RLC equivalent model proposed in [17] to Class-E. In addition, the DT transformer provides an additional degree of freedom to block one of the harmonics by placing ω_H at $2\omega_0$ or $3\omega_0$, resulting in a high impedance looking into the DT transformer ($|Z_{n,2\omega_0}| \gg 1/2\omega_0 C_p$ or $|Z_{n,3\omega_0}| \gg 1/3\omega_0 C_p$, respectively), and thus, the output network simplifies just to C_p at the harmonic frequencies. Practically, Z_n should be at least three times larger than the impedance of C_p at the harmonic frequencies for a negligible impact on efficiency. In an SE implementation, the higher parallel resonance ω_H can be parked at the second harmonic to implement Class-E_2. Another degree of freedom should be introduced to set a high impedance looking into the DT transformer at $3f_0$ for an SE Class-$E_{2,3}$ implementation. Fig. 5 shows the example topologies for SE Class-E implementation based on DT transformers as well as their simulated waveforms demonstrating Class-E-like operation. It should be noted that a DT transformer is a subset of coupled second-order LC resonators: coupling any second-order parallel resonators magnetically or capacitively results in a similar frequency response, as shown in Fig. 4. For example, it is also possible to implement a Class-E_2 PA by coupling two LC resonators capacitively in which L is implemented by transmission lines as shown in Fig. 5, which may be a more suitable topology for >100 GHz.

This work adopts a differential implementation in which $2f_0$ is in common mode, providing an additional degree of freedom to set a high impedance at $2f_0$ by carefully choosing primary parameters. Therefore, higher parallel resonance ω_H of the DT transformer is placed at $3f_0$. Fig. 6 shows a generic design example operating at 80 GHz, and its simulated voltage and current waveforms, demonstrating the Class-E operation of the DT transformer output network (tuned up to third harmonic). Devices were modeled as switches with an $R_{\text{ON}}C_{\text{OFF}}$ of 100 fs and a rise/fall time of 0.5 ps, and passives were modeled with Q of 14, resulting in an efficiency ~54% and ~20% improvement over traditional Class-E design. Small deviation of the waveforms from zero derivative voltage switching condition

[1]Derived using the series R-L-C equivalent model of a DT transformer in the neighborhood of the series resonance as proposed in [17] under a simplifying assumption of $\xi = L_2C_2/L_1C_1 = 1$.

Authorized licensed use limited to: University of Michigan Library. Downloaded on August 25,2022 at 13:45:34 UTC from IEEE Xplore. Restrictions apply.

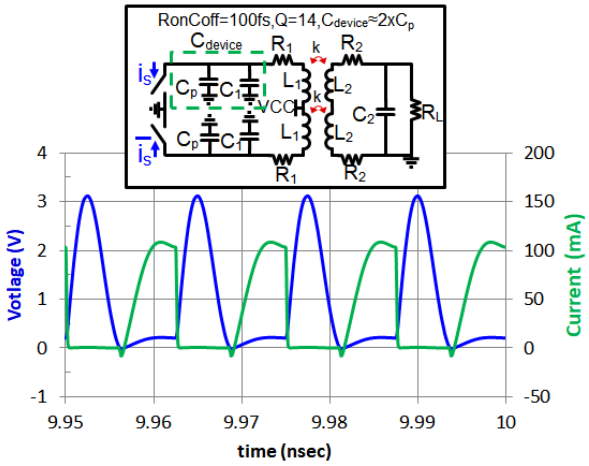

Fig. 6. Simulated voltage and current waveforms at 80 GHz using a simplified circuit model consisting of a switch with $R_{ON}C_{OFF} = 100$ fs, passive $Q = 14$, and VCC = 1 V, demonstrating Class-E-like waveforms.

(best observed from a small negative dip in the current waveform) is due to nonzero switch rise/fall time as well as deviation of R–L–C–k values from their optimum. Compared to conventional Class-E design, the proposed Class-E network increases tolerable shunt device capacitance (C_{tot}) from C_p to $C_p + C_1$ (which can be $>2 \times C_p$ based on our analysis and simulations and $\sim 1.5 \times C_p$ compared to Class-E design with a finite choke inductance [18]). In addition, similar to the traditional topology, a Class-E with finite choke as in [18] does not offer additional benefits of the DT transformer-based Class-E output network, such as differential-to-SE conversion, inherent ESD protection, and compact area (single inductor/transformer footprint).

III. Implementation

Fig. 7(a) shows the schematics of the implemented differential two- and single-stage Class-E PAs. The PAs are implemented in TI's eight-metal (Al) 130-nm BiCMOS production platform with $f_t/f_{\max}/\text{BV}_{\text{CEO}}/\text{BV}_{\text{CBO}}$ of <260 GHz/<260 GHz/1.5 V/4.5 V, respectively. The output networks are implemented based on the DT transformer Class-E concept presented earlier. In essence, the output network parameters (C_p, C_1, L_1, L_2, C_2, and k) are engineered to achieve the desired Class-E impedances at ω_0, $2\omega_0$, and $3\omega_0$. It should be emphasized that $C_p + C_1$ is not implemented as a physical capacitor but instead comes 100% from the device capacitance (intrinsic and parasitic) as well as the parasitic capacitance of the primary coil. C_2 is implemented using a custom metal–oxide–metal (MOM) capacitor (Q of $\sim$20) and absorbs the output pad capacitance as well. Output transformer network has a simulated loss of 0.9 1dB, an amplitude imbalance of <0.1 dB, and a phase imbalance of $<1.5°$ in the 76–81-GHz auto radar band. The differential neutralized pairs are used for improved differential stability, and a series biasing resistance of 20 Ω is placed for common-mode stability. The neutralization implemented using custom met2–met6 MOM capacitors and backed off

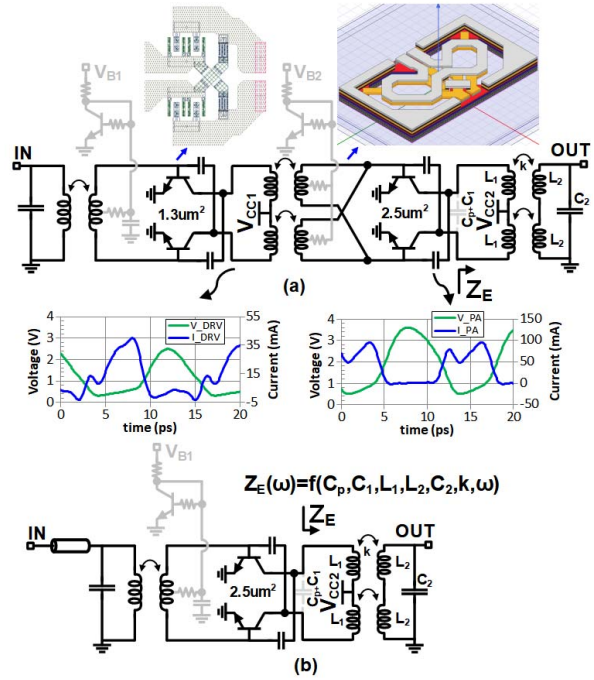

Fig. 7. Schematics of the DT transformer-based Class-E PAs. (a) Two-stage E-band Class-E PA and (b) one-stage V-band Class-E PA (one-stage E-band schematic is similar, but re-centered for change in frequency).

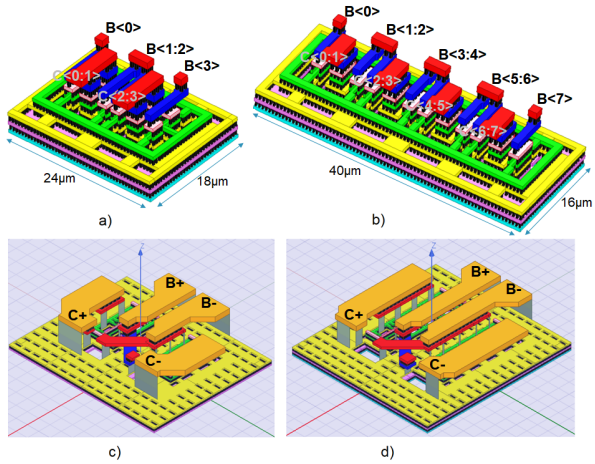

Fig. 8. Device layout and modeling: (a) driver device core ($2 \times 4 \times 1.28$ μm), (b) PA device core ($1 \times 8 \times 2.4$ μm), (c) driver device HFSS model, and (d) PA device HFSS model.

sufficiently ($\sim$15%) to avoid over-neutralization with process spread.

Fig. 8 shows the layout and modeling strategy for the driver ($2 \times 4 \times$ 1.28 μm) and the output ($1 \times 8 \times 2.4$ μm) stage devices. Fig. 8(a) and (b) shows the device cores that are RC extracted, whereas Fig. 8(c) and (d) shows the higher level routing to the device units that are captured in HFSS simulations. All the PA devices are laid out in the BEBC configuration with a base-over-emitter approach in which two Bs are brought up to met4 in the device unit and connected together over the met1/met2 emitter. The output device layout

Authorized licensed use limited to: University of Michigan Library. Downloaded on August 25,2022 at 13:45:34 UTC from IEEE Xplore. Restrictions apply.

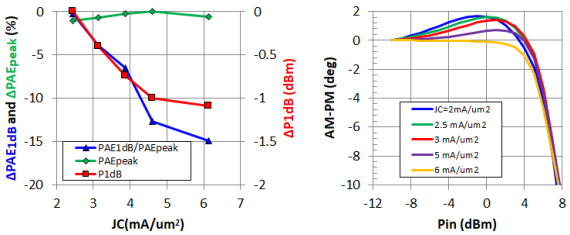

Fig. 9. Normalized large-signal performance of a single-stage 77-GHz PA versus biasing current density.

is optimized for improving power-added efficiency (PAE) by finding a balance between power gain, $G_{\max}$, and collector efficiency (η_c), which is a strong function of C_{ce}/mW where C_{ce} is the collector–emitter device capacitance. As shown in Fig. 8(a) and (b), a staggered met-5 base and met-6 collector routing is adopted in the device core for reducing base–collector capacitance (by ~14%), improving $f_{\max}$. The optimum PA device emitter length for maximizing PAE (a function of η_c and $G_{\max}$) found out to be around 2.4 μm, resulting in a measured $f_{\max}$ of 240 GHz (including all the transitions to top metal). Increased emitter length degrades $f_{\max}$ and return $G_{\max}$ but improves C_{ce}/mW due to reduced inter-finger routing, allowing a larger device size (thus a lower switch ON-resistance and higher collector efficiency) for a target output power. For example, C_{ce}/mW can be reduced by 30% at the expense of a 15% drop in $f_{\max}$ by increasing emitter length from 0.64 to 2.4 μm leading to overall improvement in PAE by ~8%. In addition, reducing parasitic base inductance in the device layout is crucial to ease driving large Class-E devices at mmWave frequencies, as base–emitter capacitance C_{be} is typically larger than 1.5–2 × C_{ce}, and as a result, any small inductance significantly increases effective base capacitance. As shown in Fig. 8(c) and (d), differential bases are routed in close proximity to each other in the bottom thick metal (met-7) to reduce parasitic base inductance, allowing us to maximize input/interstage matching transformer sizes for higher Q. The device layouts meet electro-migration requirements for 100k power-ON hours (POHs) and 125 °C operation. It is critical to note that accommodating for the stringent electro-migration constraints additionally compromises device $f_t/f_{\max}$.

The PA and driver stages are both biased for optimum large-signal performance, improved PAE and P1dB. Fig. 9 presents the normalized peak PAE, PAE at P1dB and P1dB versus the current density for the single-stage 77-GHz band PA. Peak PAE is achieved for J_C of ~4.5 mA/μm^2, whereas J_C for max P1dB is around ~2.5 mA/μm^2. The PA devices are biased at $J_C \simeq 3$ mA as a good compromise between PAE and P1dB along with minimal impact (<1.8°) on the AM–PM performance [Fig. 9(b)]. Although P1dB and AM-PM are not critical metrics for FMCW applications, they were not completely sacrificed in this work to stay competitive with the literature. The PA stages were designed for reliable operation beyond BV_{CEO} (at $V_{\text{cc2}} = 2$ V) following similar design principles described in [11]. Safe operating area (SOA) of BJTs is essentially a function of both base impedance termination and collector current density. The BJT breakdown voltage increases for low impedances presented at the base and reaches the BV_{CBO} limit (~3 × BV_{CEO}) for low collector current density. This behavior combined with nonoverlapping voltage and current waveforms allows the beyond BV_{CEO} operation in Class-E PAs. In the design phase, the dynamic load lines of the intrinsic PA devices are compared to the SOA limits (determined from dc measurements) to ensure that the PA devices stay in the SOA during RF operation. In addition, although traditional Class-E equations predict a peak collector voltage of 3.56 × V_{CC}, this ratio is lower in practical on-chip implementations due to nonzero R_{ON} and low quality of passives and gets lower with increased operation frequency. At mmWave frequencies above 60 GHz, this ratio is more like 2.2 × V_{CC} in this process. In order to ease driving large PA switching devices, a split-and-combine 45° transformer (Fig. 7 inset) is used in the two-stage PA between the driver and PA stages. The split-and-combine transformer is formed by two transformers placed 45° angled to the horizontal axis and connected in series in the primary side, whereas secondary coils are connected in parallel. It is preferred to avoid using a 2-to-1 transformer with a small secondary coil, which would degrade the quality factor and coupling coefficient (roughly ~25% degradation based on our simulations), incurring higher interstage losses. In addition, in the two-stage PA, the split-and-combine transformer-based interstage matching network was engineered to allow Class-E operation of the driver stage, demonstrating that the proposed DT Class-E design can be easily merged with high-efficiency transformer techniques (may enable Class-E DAT power combiners in future). The interstage matching network loss is simulated 0.95–1.05 dB in 76–81 GHz. The simulated collector voltage and current waveforms are shown in Fig. 7(a). Note that the current waveforms are probed at the intrinsic switching device by de-embedding the C_{ce} capacitance in the simulation testbench (essentially adding the current probe between $-C_{\text{ce}}$ and $+C_{\text{ce}}$.

IV. Measurements

Fig. 10 shows the die photographs of the fabricated mmWave PAs. The two-stage PA occupies 0.135 mm^2 and single-stage PAs occupy 0.12 mm^2. All the PAs were tested through RF probing using a chip-on-board-based setup in which VDI WR12 (60–90 GHz) extension modules were used for S-parameter and large-signal characterization. In addition, commercial-off-the-shelf (COTS) 60- and 77-GHz Quinstar GPW-50662330 and QPW76812330 PAs were included in the large-signal testing setups to provide adequate input power and validate performance under saturation. Keysigth EPM 8480 power sensors were used for large-signal measurements and power levels are calibrated down to probe tips across frequency in the large-signal characterization. Measured small-signal results for the two-stage 77-GHz and single-stage 63-GHz PAs are shown in Fig. 11, agreeing well with the simulations in general.

Figs. 12 and 13 show the measured large-signal results of the E-band PAs. Measured at $V_{\text{CC,PA}} = 2$ V and

Authorized licensed use limited to: University of Michigan Library. Downloaded on August 25,2022 at 13:45:34 UTC from IEEE Xplore. Restrictions apply.

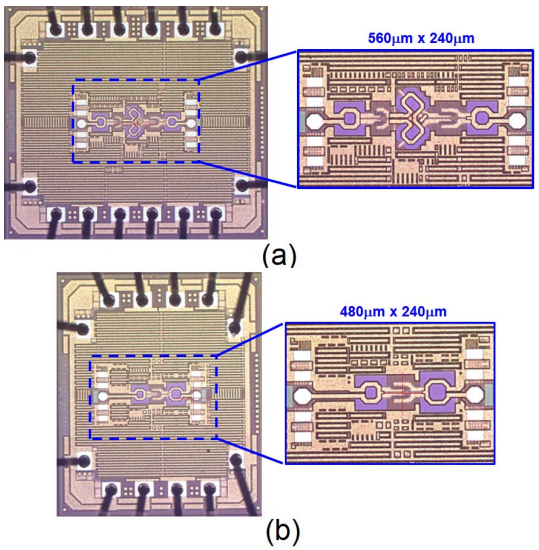

Fig. 10. Die photographs of the mmWave Class-E PAs: (a) two-stage E-band PA and (b) one-stage V-band PA. (Die photograph of the one-stage E-band PA is similar to one-stage V-band and not shown).

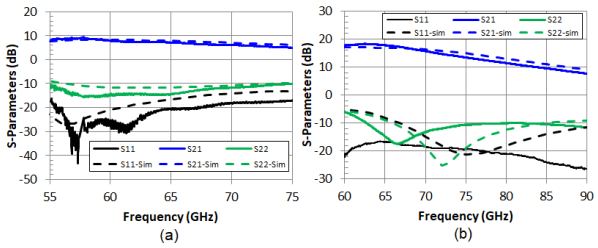

Fig. 11. Measured (solid lines) and simulated (dashed lines) S-parameters of the Class-E PAs: (a) V-band and (b) E-band.

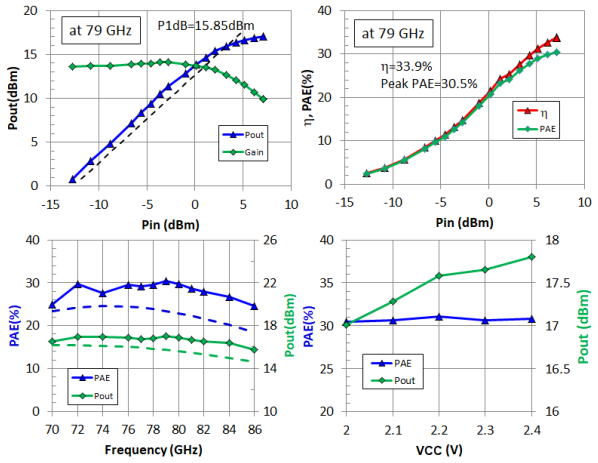

Fig. 12. Large-signal results of the two-stage DT transformer-based 79-GHz Class-E PA.

$V_{CC,DRV}$ = 1.5 V, the two-stage Class-E PA achieves a P_{sat}, collector efficiency (η), and peak PAE of 17 dBm, 33.9%, and 30.5%, respectively, at 79 GHz (Fig. 12). $P_{1\,dB}$ of 15.85 dBm with 26.2% PAE is measured at 79 GHz. The peak PAE and P_{sat} are greater than 28.5% and 16.7 dBm,

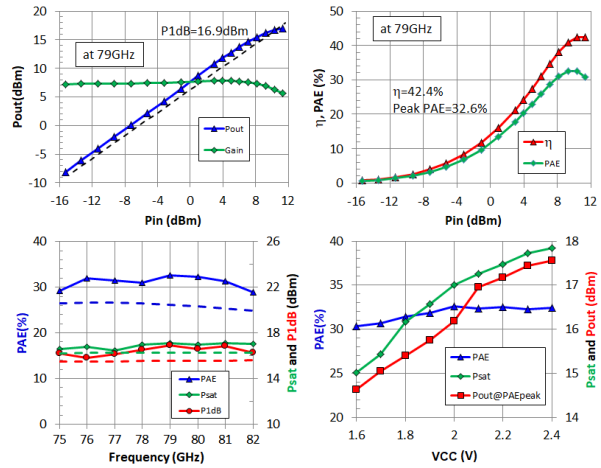

Fig. 13. Large-signal results of the single-stage 79-GHz Class-E PA test chip.

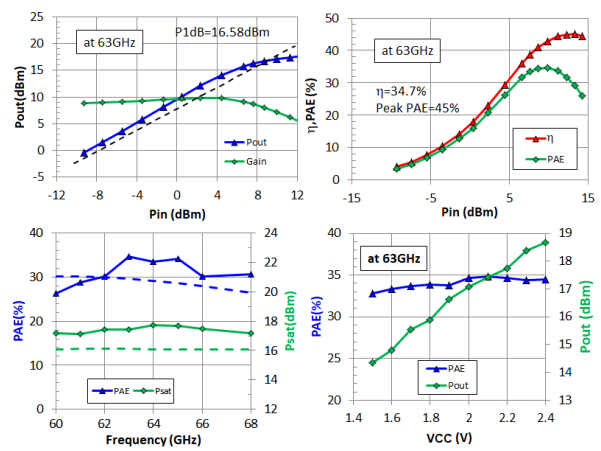

Fig. 14. Large-signal results of the single-stage 63-GHz Class-E PA.

respectively, in the 76–81-GHz automotive radar band, demonstrating the state-of-the-art performance. In addition, the two-stage E-band PA maintains a good large-signal performance over the 70–86-GHz range with a peak PAE of >25% and P_{sat} of >15.8 dBm. The difference between the measurement and simulation is attributed to modeling discrepancies of BJTs in the saturation-to-active transition region under high-current operation, consistent with earlier Class-E BiCMOS PAs [11], [19]. Fig. 12 also shows the variation of peak PAE and P_{sat} with supply voltage, and increasing V_{CC} from 2 to 2.4 V improves P_{sat} by ~0.8 dB, while peak PAE stays relatively constant (30.5%–31.1%), verifying Class-E PA operation beyond BV_{CEO}. Large-signal behavior of a single-stage 79-GHz PA (with the same device and output network as used in the two-stage PA) was also characterized (Fig. 13), presenting a peak η, PAE, and P_{sat} of 42.4%, 32.6%, and 17 dBm, respectively. Fig. 13 shows the peak PAE, P_{sat}, and $P_{1\,dB}$ versus frequency (>31%, >16.4 dBm, and >15.8 dBm in 76–81-GHz radar band, respectively) and V_{CC} (1.6–2.4 V) as well.

Authorized licensed use limited to: University of Michigan Library. Downloaded on August 25,2022 at 13:45:34 UTC from IEEE Xplore. Restrictions apply.

TABLE I

PERFORMANCE SUMMARY AND COMPARISON

	This Work	**This Work**	[21]	[22]	[12]	[23]	[24]	**This Work**	[25]	[26]	[27]	[28]
Technology	**130nm BiCMOS**	**130nm BiCMOS**	130nm BiCMOS	55nm BiCMOS	90nm BiCMOS	22nm FinFET	32nm SOI	**130nm BiCMOS**	130nm BiCMOS	130nm BiCMOS	22nm FD-SOI	40nm CMOS
fmax (GHz)	**<300**	**<300**	500	370	350	450	370	**<300**	330	300	370	350
Supply (V)	**2**	**2**	3	1.8	4.4	1	3.6	**2**	4	3.3	2	1
Freq. (GHz)	**79**	**79**	74	80	85	75	78	**63**	62	60	64	60
η (%)	**33.9**	**42.4**	-	-	19.5	-	-	**45**	-	-	37[2]	-
Peak PAE (%)	**30.5[1]**	**32.6**	28	23	19.1	26.3	24	**34.7**	23.7	29.2	28.2	30.3
PAE@P1dB (%)	**26.2**	**32.4**	-	22	-	11.6	15.5[2]	**34.5**	23.7	29	27	21.6
Psat (dBm)	**17**	**17**	17.4	19	22	12.8	18.7	**18.1**	17.5	15.7	20.8	17
OP1dB (dBm)	**15.8**	**16.9**	13.6	18	-	5.7	13.6[2]	**16.6**	17.1	14	19.5	13.8
Area (mm^2)	**0.36**	**0.24**	0.3	0.24	1.4	0.16	0.12	**0.24**	0.6	0.2	0.04	0.51
Design	**Class-E 2-stg, Diff**	**Class-E 1-stg, Diff**	Class-AB cascode, Diff	I-Clamp, CB 2-stg, Diff	Class-E 2-stack, SE	Class-AB 2-stg, Diff	Class-AB 3-stack, SE	**Class-E 1-stg, Diff**	Class-AB Doherty	Class-AB cascode, SE	Class-AB 2-way, Diff	Class-AB 2-stack, Diff

[1] Peak PAE=31.1%, Psat=17.6dBm at 2.2V supply.
[2] Estimated from the measurement plots.

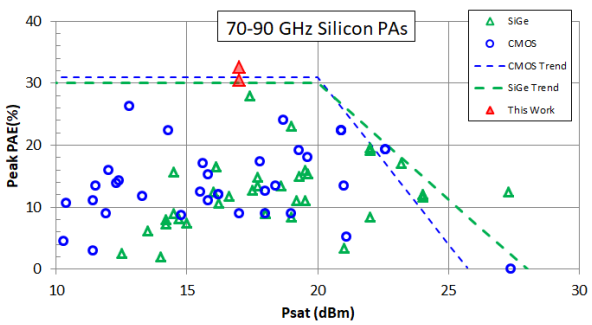

Fig. 15. Comparison with state-of-the-art silicon PAs (CMOS, SOI, and BiCMOS) at 56–70 GHz [20].

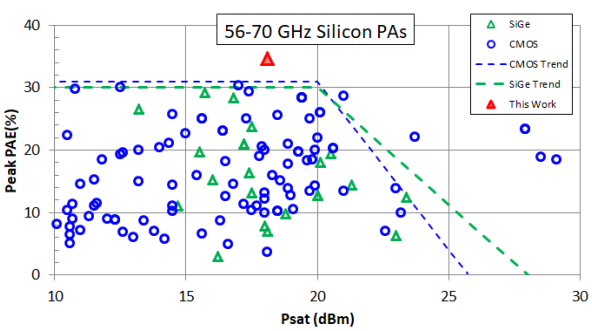

Fig. 16. Comparison to state-of-the-art silicon PAs (CMOS, SOI, and BiCMOS) at 56–70 GHz [20].

Fig. 14 shows the large-signal results of the single-stage V-band PA. Measured at $V_{CC} = 2$ V and 63 GHz, the V-band Class-E PA achieves P_{sat}, η, and peak PAE of 18.1 dBm, 45%, and 34.7%, respectively. $P_{1\,dB}$ of 16.5 dBm is measured with the PAE of 34.4%, and peak PAE is higher than 30% in 62–68-GHz range (limited below 62 GHz and above 68 GHz due to WR12 setup and COTS PA roll-off, respectively).

Figs. 15 and 16 and Table I summarize the measurement results and compare them to state-of-the-art E- and V-band silicon PAs at similar frequencies [21]–[28]. These works achieve the highest PAE and PAE at 1-dB compression among the published works in any silicon process (BiCMOS, bulk-CMOS, silicon-on-insulator (SOI), and FinFET) although operating in a lower f_t/f_{max} process node.

V. CONCLUSION

E- and V-band Class-E PAs for mmWave radar sensors have been demonstrated in a production 130-nm BiCMOS process with the state-of-the-art PAE of 30.5% and 34.7% and P_{sat} of 17 and 18.1 dBm at 63 and 79 GHz, respectively. The PAs employ a new Class-E output network that is based on doubly balanced transformers and allows increasing the switch size, therefore improving η and PAE at mmWave frequencies. A measured P1dB within 1.5 dB of P_{sat} and graceful η roll-off suggests the applicability of this work beyond saturated operation for data communication.

ACKNOWLEDGMENT

The authors would like to thank V. Dandige and V. Gani for layout support; D. Garcia, M. Chowdhury, T. Tran, and J. Garcia for help with assembly and packaging; R. Kulak and C. Chi for measurement assistance; M. Dahlstrom, T. Chatterjee, S. Martin, and TI's ATD team for process support/discussions; and Kilby Labs leadership for supporting this activity. They would also like to thank K. Dandu, V. Srinivasan, and B. Ginsburg for technical discussions and Prof. H. Krishnaswamy, Columbia University, New York, NY, USA, for equipment support.

REFERENCES

[1] B. P. Ginsburg *et al.*, "A multimode 76-to-81 GHz automotive radar transceiver with autonomous monitoring," in *IEEE ISSCC Dig. Tech. Papers*, Feb. 2018, pp. 158–160.

[2] K. Dandu *et al.*, "High-performance and small form-factor mm-Wave CMOS radars for automotive and industrial sensing in 76-to-81 GHz and 57-to-64 GHz bands," in *IEEE ISSCC Dig. Tech. Papers*, Feb. 2021, pp. 39–41.

[3] M. Porranzl, C. Wagner, H. Jaeger, and A. Stelzer, "High-bandwidth quasi-circulator-based monostatic automotive radar with self-interference suppression," *IEEE Trans. Microw. Theory Techn.*, vol. 69, no. 1, pp. 198–209, Jan. 2021.

[4] V. Giannini *et al.*, "A 192-virtual-receiver 77/79 GHz GMSK code-domain MIMO radar system-on-chip," in *IEEE ISSCC Dig. Tech. Papers*, Feb. 2019, pp. 164–166.

[5] W. Lee, T. Dinc, and A. Valdes-Garcia, "Multi-mode 60-GHz radar transmitter SoC in 45-nm SOI CMOS," *IEEE J. Solid-State Circuits*, vol. 55, no. 5, pp. 1187–1198, May 2020.

[6] S. Shopov, M. G. Girma, J. Hasch, N. Cahoon, and S. P. Voinigescu, "Ultralow-power radar sensors for ambient sensing in the V-band," *IEEE Trans. Microw. Theory Techn.*, vol. 65, no. 12, pp. 5401–5410, Dec. 2017.

Authorized licensed use limited to: University of Michigan Library. Downloaded on August 25,2022 at 13:45:34 UTC from IEEE Xplore. Restrictions apply.

[7] C. Waldschmidt, J. Hasch, and W. Menzel, "Automotive radar—From first efforts to future systems," *IEEE J. Microw.*, vol. 1, no. 1, pp. 135–148, Jan. 2021.

[8] B. P. Ginsburg, S. M. Ramaswamy, V. Rentala, E. Seok, S. Sankaran, and B. Haroun, "A 160 GHz pulsed radar transceiver in 65 nm CMOS," *IEEE J. Solid-State Circuits*, vol. 49, no. 4, pp. 984–995, Apr. 2014.

[9] O. T. Ogunnika and A. Valdes-Garcia, "A 60 GHz class-E tuned power amplifier with PAE>25% in 32 nm SOI CMOS," in *Proc. IEEE Radio Freq. Integr. Circuits Symp.*, Jun. 2012, pp. 65–68.

[10] A. Chakrabarti and H. Krishnaswamy, "High-power high-efficiency class-E-like stacked mmWave PAs in SOI and bulk CMOS: Theory and implementation," *IEEE Trans. Microw. Theory Techn.*, vol. 62, no. 8, pp. 1686–1704, Aug. 2014.

[11] K. Datta and H. Hashemi, "Performance limits, design and implementation of mm-Wave SiGe HBT class-E and stacked class-E power amplifiers," *IEEE J. Solid-State Circuits*, vol. 49, no. 10, pp. 2150–2171, Oct. 2014.

[12] K. Datta and H. Hashemi, "High-breakdown, high-f_{max} multi-port stacked-transistor topologies for the W-band power amplifiers," *IEEE J. Solid-State Circuits*, vol. 52, no. 5, pp. 1305–1319, May 2017.

[13] Z. Duan *et al.*, "A 76-to-81 GHz 2×8 FMCW MIMO radar transceiver with fast chirp generation and multi-feed antenna-in-package array," in *IEEE ISSCC Dig. Tech. Papers*, Feb. 2021, pp. 228–230.

[14] N. O. Sokal and A. D. Sokal, "Class E—A new class of high-efficiency tuned single-ended switching power amplifiers," *IEEE J. Solid-State Circuits*, vol. JSSC-10, no. 3, pp. 168–176, Jun. 1975.

[15] T. Dinc, S. Akhtar, S. Kalia, B. Haroun, and S. Sankaran, "Doubly-tuned transformer-based class-E power amplifiers in 130 nm BiCMOS for mmWave radar sensors," in *Proc. IEEE Radio Freq. Integr. Circuits Symp. (RFIC)*, Jun. 2021, pp. 3–6.

[16] I. Aoki, S. Kee, D. Rutledge, and A. Hajimiri, "Distributed active transformer—A new power-combining and impedance-transformation technique," *IEEE Trans. Microw. Theory Techn.*, vol. 50, no. 1, pp. 316–331, Jan. 2002.

[17] A. Mazzanti and A. Bevilacqua, "Second-order equivalent circuits for the design of doubly-tuned transformer matching networks," *IEEE Trans. Circuits Syst. I, Reg. Papers*, vol. 65, no. 12, pp. 4157–4168, Dec. 2018.

[18] D. Milosevic, J. van der Tang, and A. van Roermund, "Explicit design equations for class-E power amplifiers with small DC-feed inductance," in *Proc. Eur. Conf. Circuit Theory Des.*, vol. 3, 2005, pp. 101–104.

[19] E. Rahimi, J. Zhao, F. Svelto, and A. Mazzanti, "High-efficiency SiGe-BiCMOS E-band power amplifiers exploiting current clamping in the common-base stage," *IEEE J. Solid-State Circuits*, vol. 54, no. 8, pp. 2175–2185, Aug. 2019.

[20] H. Wang, T. Huang, N. Mannem, and J. Lee. (2020). *Power Amplifiers Performance Survey 2000-Present*. [Online]. Available: https://gems.ece.gatech.edu/

[21] D. del Rio, I. Gurutzeaga, A. Beriain, H. Solar, and R. Berenguer, "A compact, wideband, and temperature robust 67–90-GHz SiGe power amplifier with 30% PAE," *IEEE Microw. Wireless Compon. Lett.*, vol. 29, no. 5, pp. 351–353, May 2019.

[22] J. Zhao, E. Rahimi, F. Svelto, and A. Mazzanti, "A SiGe BiCMOS E-band power amplifier with 22% PAE at 18 dBm OP1 dB and 8.5% at 6 dB back-off leveraging current clamping in a common-base stage," in *IEEE ISSCC Dig. Tech. Papers*, Feb. 2017, pp. 42–43.

[23] S. Callender, S. Pellerano, and C. Hull, "An E-band power amplifier with 26.3% PAE and 24-GHz bandwidth in 22-nm FinFET CMOS," *IEEE J. Solid-State Circuits*, vol. 54, no. 5, pp. 1266–1273, May 2019.

[24] J. A. Jayamon, J. F. Buckwalter, and P. M. Asbeck, "A PMOS mm-Wave power amplifier at 77 GHz with 90 mW output power and 24% efficiency," in *Proc. IEEE Radio Freq. Integr. Circuits Symp. (RFIC)*, May 2016, pp. 262–265.

[25] K. Greene, A. Sarkar, and B. Floyd, "A 60-GHz dual-vector Doherty beamformer," *IEEE J. Solid-State Circuits*, vol. 52, no. 5, pp. 1373–1387, May 2017.

[26] Y. Sun, G. G. Fischer, and J. C. Scheytt, "A compact linear 60-GHz PA with 29.2% PAE operating at weak avalanche area in SiGe," *IEEE Trans. Microw. Theory Techn.*, vol. 60, no. 8, pp. 2581–2589, Aug. 2012.

[27] M. Cui, C. Carta, and F. Ellinger, "A 21-dBm 3.7 W/mm^2 28.7% PAE 64-GHz power amplifier in 22-nm FD-SOI," *IEEE Solid-State Circuits Lett.*, vol. 3, pp. 386–389, 2020.

[28] D. Zhao and P. Reynaert, "A 60-GHz dual-mode class AB power amplifier in 40-nm CMOS," *IEEE J. Solid-State Circuits*, vol. 48, no. 10, pp. 2323–2337, Oct. 2013.

Tolga Dinc (Member, IEEE) received the B.S. and M.S. degrees in electrical engineering from Sabanci University, Istanbul, Turkey, in 2010 and 2012, respectively, and the Ph.D. degree in electrical engineering from Columbia University, New York, NY, USA, in 2017.

He is currently with Kilby Labs, Texas Instruments, Dallas, TX, USA, as an RF/millimeter-wave (mmWave) Engineer. He held internship positions with Texas Instruments Inc. in 2015 and the IBM T. J. Watson Research Center, Yorktown Heights, NY, USA, in 2016. He has authored or coauthored more than 40 peer-reviewed articles in the area of RF/mmWave integrated circuits, antennas, and systems for a variety of applications.

Dr. Dinc has been serving as a member of the Technical Program Committee for the IEEE Custom Integrated Circuits Conference since 2019. He was a recipient or co-recipient of several honors and awards, including the *IEEE Microwave Magazine* Best Paper Award in 2021, the IEEE Radio Frequency Integrated Circuits (RFIC) Symposium Industry Best Paper Awards (Second Place) in 2019 and 2021, the IEEE RFIC Symposium Best Student Paper Award (First Place) in 2015, the Columbia University Eli Jury Award in 2017, the IEEE MTT-S Graduate Fellowship in 2016, the Columbia University Jacob Millman Award in 2016, the Sabanci University Gursel Sonmez Research Award in 2012, and the IEEE MTT-S Undergraduate/Pre-Graduate Scholarship Award in 2010.

Sachin Kalia (Member, IEEE) received the B.Tech. and M.Tech. degrees (Hons.) in electrical engineering from IIT Kharagpur, Kharagpur, India, in 2009 and 2010, respectively, and the Ph.D. degree in electrical engineering from the University of Minnesota, Minneapolis, MN, USA, in 2015, with a focus on phased arrays and injection locking.

He joined Intel's BT/Wi-Fi Group, Portland, OR, USA, where he worked on frequency synthesizers for BT/Wi-Fi and the Internet of Things (IoT) applications. In 2018, he joined Kibly Labs, Texas Instruments, Dallas, TX, USA, where he has been working on low- and high-frequency clocking applications. His broader research interests lie in frequency synthesizers and multi-antenna transceivers.

Siraj Akhtar received the B.S.E.E. degree *(summa cum laude)* from the University of Mississippi, Oxford, MS, USA, in 1993, and the M.S. and Ph.D. degrees in electrical engineering from The Ohio State University, Columbus, OH, in 1996 and 2000, respectively.

He joined Texas Instruments Inc., Dallas, TX, USA, right after graduating and has held various design and management roles at TI working in pre-concept to high-volume production designs for cellular handsets, base station, millimeter-wave (mmWave), and low-power integrated circuits (ICs). His areas of expertise include TX, RX, and phase-locked loop (PLL)/clocking circuits, systems, and high-frequency package/printed circuit board (PCB) design targeted for communications and sensing applications. He co-proposed, co-architected, and managed the analog design of the world's first MIMO LTE/WCDMA Node B transceiver system on chip (SOC) through customer deployment. He is currently an RF/mmWave Technologist at Kilby Labs, TI's advanced research and development organization, and a Senior Member of Technical Staff and the holder of 25 issued/pending patents. He has published 30 TI internal/IEEE external articles.

Authorized licensed use limited to: University of Michigan Library. Downloaded on August 25,2022 at 13:45:34 UTC from IEEE Xplore. Restrictions apply.

Baher Haroun (Fellow, IEEE) received the B.Sc.E.E. and M.Sc. degrees from Ain Shams University, Cairo, Egypt, in 1981 and 1984, respectively, and the Ph.D. degree from the University of Waterloo, Waterloo, ON, Canada, in 1990.

He joined the Mixed Signal Group, TI, in 1995, after being an Assistant Professor and an Associate Professor at Concordia University, Montreal, QC, Canada, from 1989 to 1995. He is an elected Senior Fellow at Texas Instruments Inc. (TI), Dallas, TX, USA, and the Director of the Advanced Technology Exploration Team, Kilby Labs, TI. Over his years at TI, he has led multiple research and development projects in high-performance wireless systems, analog-to-digital converters (ADCs), digital-to-analog converters (DACs), millimeter-wave (mmWave)/THz RF, high-precision clocks/phase-locked loop (PLL), gigabit per second serializer/deserializer (SerDes), efficient RF digital power amplifiers and ultrasonic, and optical and mmWave radar sensing circuits and systems. From 1998 to 2009, he has led worldwide design teams for analog, power management, and RF CMOS integration in TI Wireless BU over six digital CMOS processes (from 0.18 μm to 28 nm) nodes for billions of wireless devices in the market. Since 2009, he has helped create and direct multiple teams at Kilby Labs, TI. He has over 150 issued patents and more than 50 published IEEE papers and was a presenter.

Dr. Haroun has served as the session chair, has given invited talks, and has been a panel speaker. He has served as a member of technical committees and a reviewer for multiple IEEE conferences, including International Solid-State Circuits Conference (ISSCC) and European Solid-State Circuits Conference (ESSCIRC).

Benjamin Cook, photograph and biography not available at the time of publication.

Swaminathan Sankaran (Member, IEEE) was born in Chennai, India, in 1981. He received the B.Tech. degree in electronics and communications engineering from the Pondicherry Engineering College, Pondicherry, India, in 2002, and the M.S. degree in electrical and computer engineering and the Ph.D. degree from the University of Florida, Gainesville, FL, USA, in 2004 and 2008, respectively.

He was with Silicon Microwave Integrated Circuits and Systems (SIMICS) Research Group. During summer 2006, he interned at Bitwave Semiconductor Corporation, Lowell, MA, USA, where he was involved in RF circuit design and device modeling. He is currently a Distinguished Member Technical Staff (DMTS) and a Design Manager with Kilby Labs, Texas Instruments Inc., Dallas, TX, USA, directing research and development of high-voltage/speed isolation, RF, clocks, and millimeter-wave (mmWave)/THz circuits and systems. His research interests are in the analysis and design of Radio Frequency Integrated Circuits (RFIC)/mmWave systems, transmit/receive front ends, clocks, and high-speed analog circuits in CMOS.

Dr. Sankaran serves as a Technical Program Committee (TPC) Member for the International Solid-State Circuits Conference (ISSCC) and the Custom Integrated Circuits Conference (CICC).

Authorized licensed use limited to: University of Michigan Library. Downloaded on August 25,2022 at 13:45:34 UTC from IEEE Xplore. Restrictions apply.